Modulus

Table & Desking System

ABBOTTS

simple beauty

Showing: Twin pole, double span frame with 3200 x 1200mm worktop.

The Modulus system has a timeless simplicity with one universal leg style that supports many table designs. The distinctive A-shaped rail and socket system securely locks the table together & gives immense strength.

collaboration

Modulus is a versatile table system that helps people collaborate, communicate and exchange ideas. They can be static tables of any size or they can be self-contained modules that move and adapt easily to fit the space or task at hand.

sophistication

Shown with Moda Midback.

Modulus tables work in all kinds of facilities. Highly finished, cast aluminum components and sophisticated, engineering grade mechanisms give an unparalleled aesthetic and functionality.

working together

Tables are most powerful when used together. Modulus Flip tables can be used in any combination, which creates endless opportunities for constructive interaction in classrooms, training rooms & meeting rooms. All Flip tables come with durable locking castors to ensure they are easy to re-configure into new layouts.

Shown with Zipp chairs.

Locked Unlocked

Connecting tables with tight joins is made easy with the very secure and simple-to-operate nylon links.

functionality

Shown with Link chairs in chrome & standard Canteen tables.

Fresh & elegant - each table has a refined, modern appearance, which makes Modulus work with a wide range of furniture & interiors.

executive office

Modulus Executive office settings provide modern executives with the distinctive impression of quality, precision & strength that rises above all pretenders.

Shown with Moda Highback & Moda Guest chairs.

open plan office

Shown with Balance task chairs, Boxer visitor chairs & Modulus Flip tables.

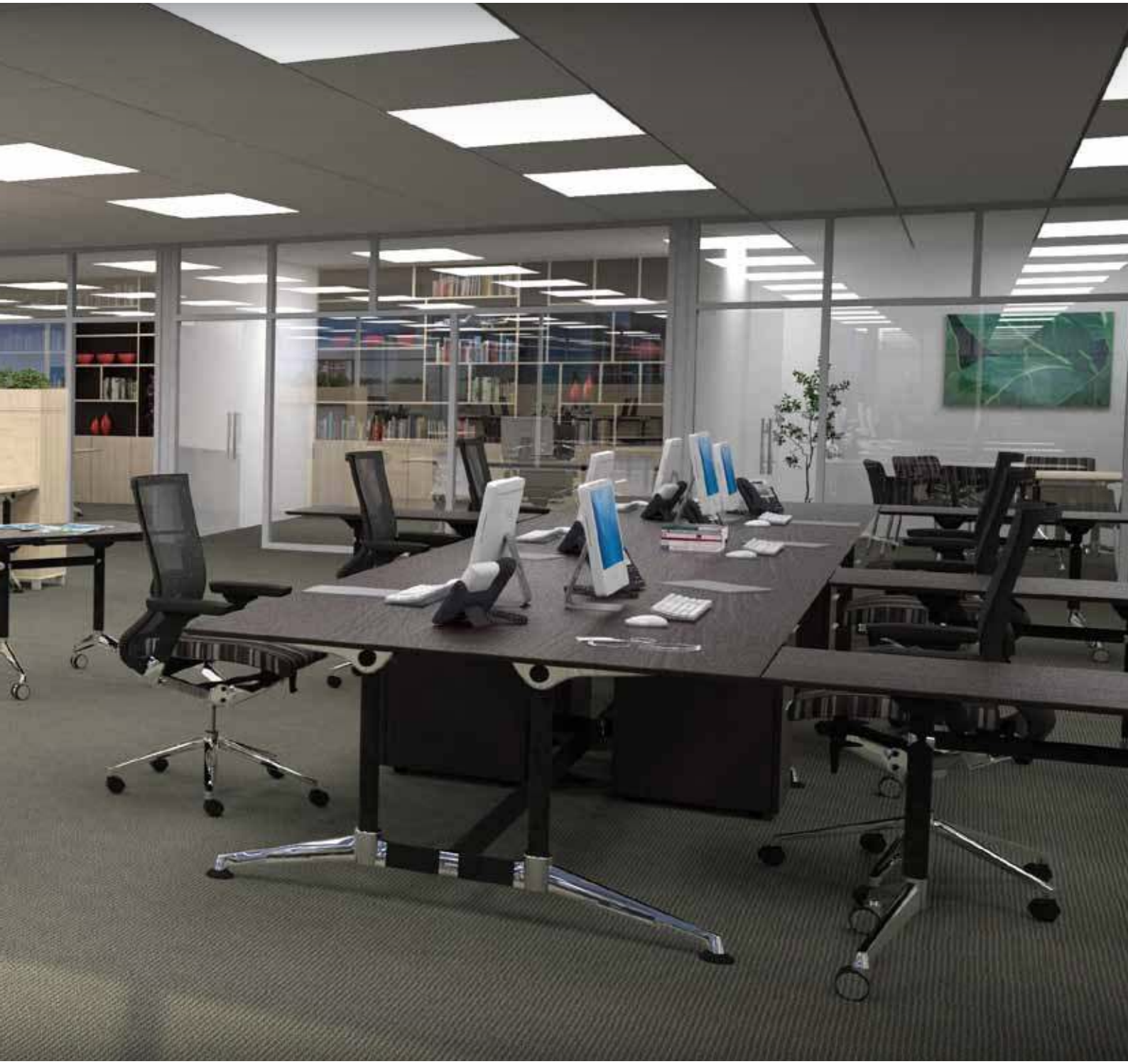

Your open plan office can be a work of art. Modulus shared desking with interactive mobile side tables creates the perfect environment for your team to achieve their most creative production.

conference & training

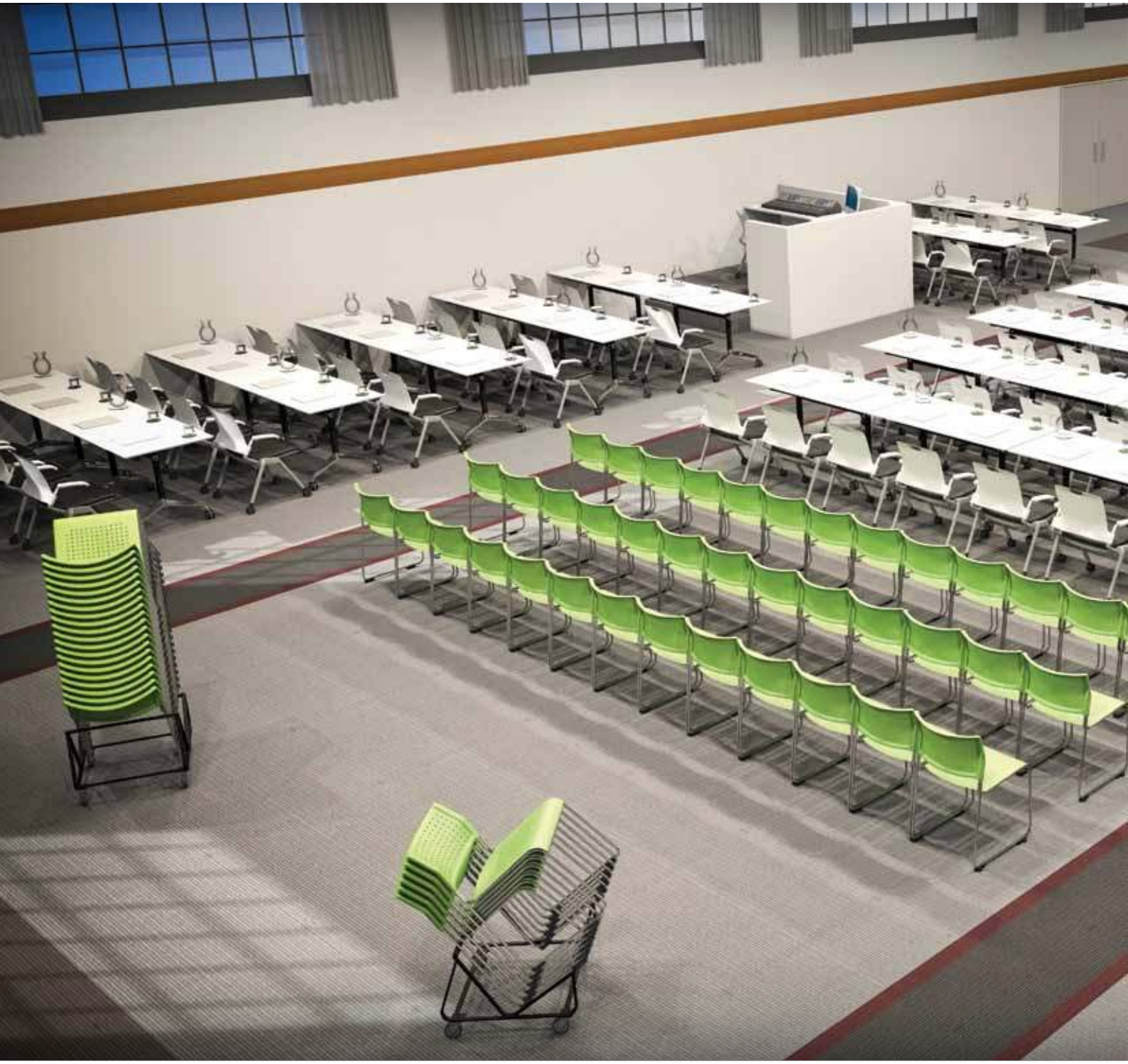

Table tops flip up, chair seats flip up and both roll away on castors to nest together when no longer needed. This instantly transforms your training room into highly flexible environment that is capable of a variety of teaching formats.

Shown with Adapta chairs, Link chairs & Link trolleys.

Modulus Twin Pole Triple Span

Standard features

- Black powdercoated posts & rails, polished alloy feet, collars & connectors
- Leveling glides
- Worksurfaces are manufactured in the veneer or laminate of your choice.

Standard frame sizes fit worktops of

3700mm - 7400mm length x
1200mm - 2000mm width

Modulus Single Pole Triple Span

Standard features

- Black powdercoated posts & rails, polished alloy feet, collars & connectors
- Leveling glides
- Worksurfaces are manufactured in the veneer or laminate of your choice.

Standard frame sizes fit worktops of

3700mm - 7400mm length x
800mm - 1200mm width

Modulus Twin Pole Double Span

Standard features

- Black powdercoated posts & rails, polished alloy feet, collars & connectors
- Leveling glides
- Worksurfaces are manufactured in the veneer or laminate of your choice.

Standard frame sizes fit worktops of

2600mm - 5200mm length x
1200mm - 2000mm width

Modulus Single Pole Double Span

Standard features

- Black powdercoated posts & rails, polished alloy feet, collars & connectors
- Leveling glides
- Worksurfaces are manufactured in the veneer or laminate of your choice.

Standard frame sizes fit worktops of

2600mm - 5200mm length x
800mm - 1200mm width

Modulus Twin Pole Single Span

Standard features

- Black powdercoated posts & rails, polished alloy feet, collars & connectors
- Leveling glides
- Worksurfaces are manufactured in the veneer or laminate of your choice.

Standard frame sizes fit worktops of

1400mm - 3000mm length x
1200mm - 2000mm width

Modulus Single Pole Single Span

Standard features

- Black powdercoated posts & rails, polished alloy feet, collars & connectors
- Leveling glides
- Worksurfaces are manufactured in the veneer or laminate of your choice.

Standard frame sizes fit worktops of

1400mm - 3000mm length x
800mm - 1200mm width

Modulus Large Fixed Leg Single Span

Standard features

- Black powdercoated posts & rails, polished alloy feet & worktop supports
- Leveling glides
- Worksurfaces are manufactured in the veneer or laminate of your choice.

Standard frame sizes fit worktops of

1400mm - 3000mm length x
800mm - 1200mm width

Modulus Small Fixed Leg Single Span

Standard features

- Black powdercoated posts & rails, polished alloy feet & worktop supports
- Leveling glides
- Worksurfaces are manufactured in the veneer or laminate of your choice.

Standard frame sizes fit worktops of

1400mm - 3000mm length x
600mm - 900mm width

Modulus Flip Tables

Standard features

- White or black powdercoat posts, rail & pullbars, polished cast alloy feet, silver castors
- AFRDI approved for severe commercial use
- Worksurfaces are manufactured in the veneer or laminate of your choice.

Standard frame sizes accommodate worksurface of

800mm - 2200mm length x
600mm - 1050mm width

Modulus Flip Table Modesty

PVC Modesty Panels come in white & silver, 1350mm wide and 1650mm wide.

Modulus Flipped with Modesty

Modulus Flip Table Nested

Modulus Flip Table Links

Locked Unlocked

Connecting tables together is made easy with the very secure and simple-to-operate mechanism

Modulus Standard Black Pole and Rails

Standard features

- 2x locking, 2x non locking castors
- Black posts, rails, pullbars, polished alloy feet
- One handed mechanism use
- Industrial grade nylon mechanism includes vertical locking mechanism.

Suits worksurface sizes of

800mm - 2200mm length x
600mm - 900mm width

Modulus Standard White Pole and Rails

Standard features

- 2x locking, 2x non locking castors
- White posts, rails, pullbars, polished alloy feet
- One handed mechanism use
- Industrial grade nylon mechanism includes vertical locking mechanism.

Suits worksurface sizes of

800mm - 2200mm length x
600mm - 900mm width

Modulus Large Black Pole and Rails

Standard features

- 2x locking, 2x non locking castors
- Black posts, rails, pullbars, polished alloy feet
- One handed mechanism use
- Industrial grade nylon mechanism includes vertical locking mechanism.

Suits worksurface sizes of

800mm - 2200mm length x
800mm - 1050mm width

Modulus Large White Pole and Rails

Standard features

- 2x locking, 2x non locking castors
- White posts, rails, pullbars, polished alloy feet
- One handed mechanism use
- Industrial grade nylon mechanism includes vertical locking mechanism.

Suits worksurface sizes of

800mm - 2200mm length x
800mm - 1050mm width

Modulus Straight Desks

Standard features

- Black powdercoated posts & rails, polished alloy feet, collars & connectors
- Leveling glides
- Worksurfaces and modesty panels are manufactured in the veneer or laminate of your choice.

Standard frame sizes fit worktops of

1500mm - 2400mm width x
700mm - 900mm depth

Modulus Corner Workstations

Standard features

- Black powdercoated posts & rails, polished alloy feet, collars & connectors
- Leveling glides
- Worksurfaces and modesty panels are manufactured in the veneer or laminate of your choice.

Standard frame sizes fit worktops of

Main worksurfaces
1500mm - 2400mm width x
700mm - 900mm depth

Return worksurfaces
600mm - 1800mm width x
500mm - 700mm depth

Modulus Shared Desks Single Sided

Standard features

- Black powdercoated posts & rails, polished alloy feet, collars & connectors
- Leveling glides
- Worksurfaces and modesty panels are manufactured in the veneer or laminate of your choice.

Standard frame sizes fit worktops of

1500mm - 2400mm width x
700mm - 900mm depth

Modulus Shared Desks Double Sided

Standard features

- Black powdercoated posts & rails, polished alloy feet, collars & connectors
- Leveling glides
- Worksurfaces and modesty panels are manufactured in the veneer or laminate of your choice.

Standard frame sizes fit worktops of

1500mm - 2400mm width x
600mm - 900mm depth

Modulus Shared Workstations

Standard features

- Black powdercoated posts & rails, polished alloy feet, collars & connectors
- Leveling glides
- Worksurfaces and modesty panels are manufactured in the veneer or laminate of your choice.

Standard frame sizes fit worktops of

Main worksurfaces
1500mm - 2400mm width x
1200mm - 2400mm depth

Return worksurfaces
600mm - 1800mm width x
500mm - 700mm depth

Modulus Shared Workstations Tee Layout

Modulus Shared Workstations Plus Layout

Modulus Shared Workstations H Layout

Modulus Pedestal Tables

Standard features

- Black powdercoated posts & rails, polished alloy feet, collars & connectors
- Leveling glides
- Worksurfaces and modesty panels are manufactured in the veneer or laminate of your choice.

Standard frame fits worksurface size of

1400mm - 1800mm diameter or
1200mm - 1500mm square

Modulus 4 Post Meeting Table

Side Table

Frame height 425mm high

Standard frame fits worksurface size of

400mm - 700mm diameter or
400mm - 600mm square

Small Single Post Meeting Table

Frame height 695mm high

Standard frame fits worksurface size of

400mm - 700mm diameter or
400mm - 600mm square

Single Post Meeting Table

Frame height 695mm high

Standard frame fits worksurface size of

800mm - 1200mm diameter or
700mm - 1000mm square

Tambours

Standard features

- Locking, space-saving roller doors
- Arctic White powdercoated feet
- 25mm tops and base, 18mm sides and shelves
- Silver doors
- Flush-joined construction

3 Levels + Planter

- 1250h x 900w x 450d mm
- Planter 150h x 900w x 450d

3 Levels

- 1250h x 900w x 450d mm

Credenzas

Standard features

- Locking doors
- Arctic White powdercoated feet with leveling glides
- 25mm tops and base, 18mm sides and shelves
- Flush-joined construction

1200 Long - 2 Levels

- 900h x 1200w x 400d mm

1800 Long - 2 Levels

- 900h x 1800w x 400d mm

Bookshelves

Standard features

- Arctic White powdercoated feet
- 25mm tops and base, 18mm sides and shelves
- Flush-joined construction

1250 High - 3 Levels

- 1250h x 900w x 300d mm

1800 High - 5 Levels

- 1800h x 900w x 300d mm

Cupboards

Standard features

- Locking doors
- Arctic White powdercoated feet with leveling glides
- 25mm tops and base, 18mm sides and shelves
- Flush-joined construction

1250 High - 3 Levels

- 1250h x 900w x 400d mm

1800 High - 5 Levels

- 1800h x 900w x 400d mm

Caddy

Standard features

- Studio White
- 18mm, flush-joined construction
- 5 white castors
- 640h x 993w x 460d mm
- Gang-lock to all drawers
- Height adjustable shelves

Melamine Mobiles

- 18mm construction - Studio White E1 grade board
- 640h x 467w x 460d mm
- Gang-locks all drawers
- Fifth wheel for stability

4 Drawer or 2 Drawer + File

Steel Mobiles

- 2 Drawer & File with curved front
- Pen tray included
- 640h x 392w x 500d mm
- Gang-locks all drawers
- Fifth wheel for stability

White or Silver Powdercoat

Seat Toppas

Standard features

- Fits on Caddy mobile or Melamine mobile
- 27h x 467w x 467w mm
- Selected fabrics only

Table length guide

600mm Wide Fixed Leg

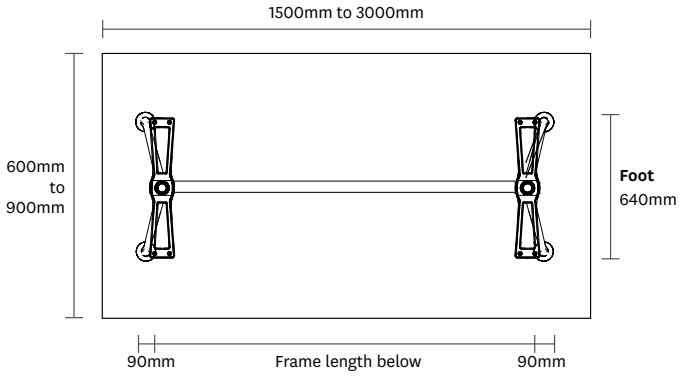

800mm Wide Fixed Leg

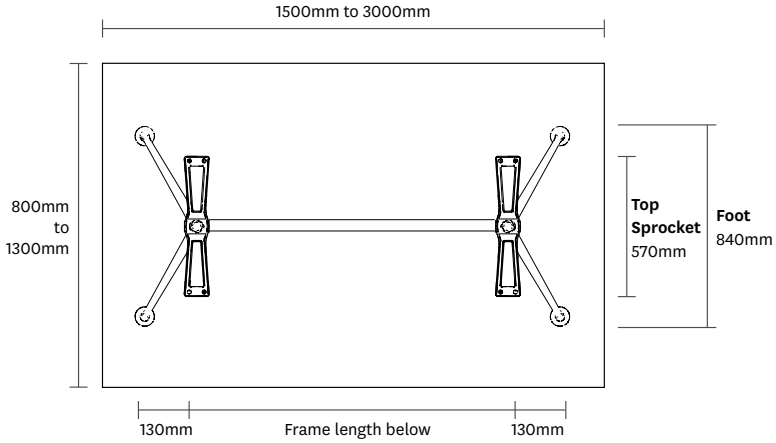

Total Frame Length

AU-FWTOPRAIL1100 = 1050mm
AU-FWTOPRAIL1300 = 1350mm
AU-FWTOPRAIL1600 = 1650mm
AU-FWTOPRAIL2200 = 2250mm

Standard Foot Flip Tables

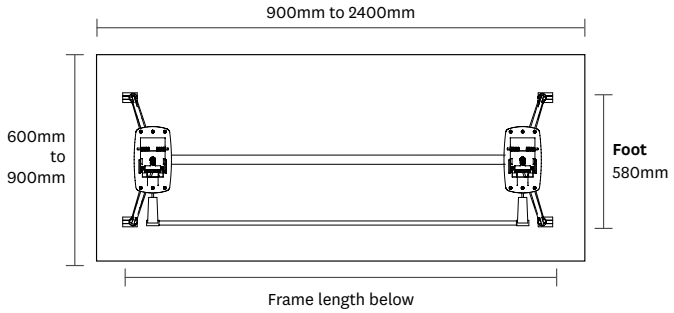

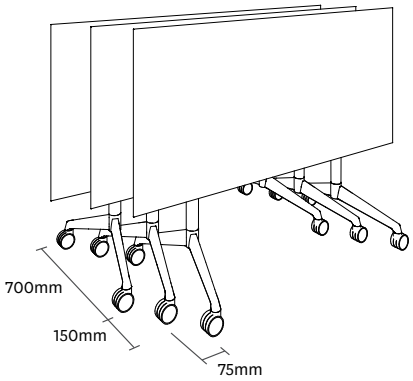

Large Foot Flip Tables

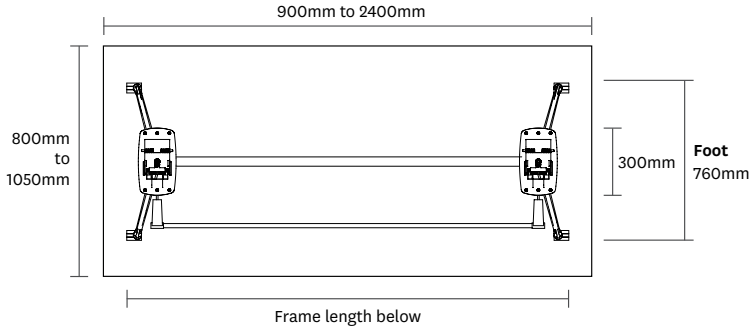

Total Frame Length

AU-FWFLRAIL50 = 800mm
AU-FWFLRAIL80 = 1100mm
AU-FWFLRAIL110 = 1400mm
AU-FWFLRAIL140 = 1700mm

Single Post Legs with Collar

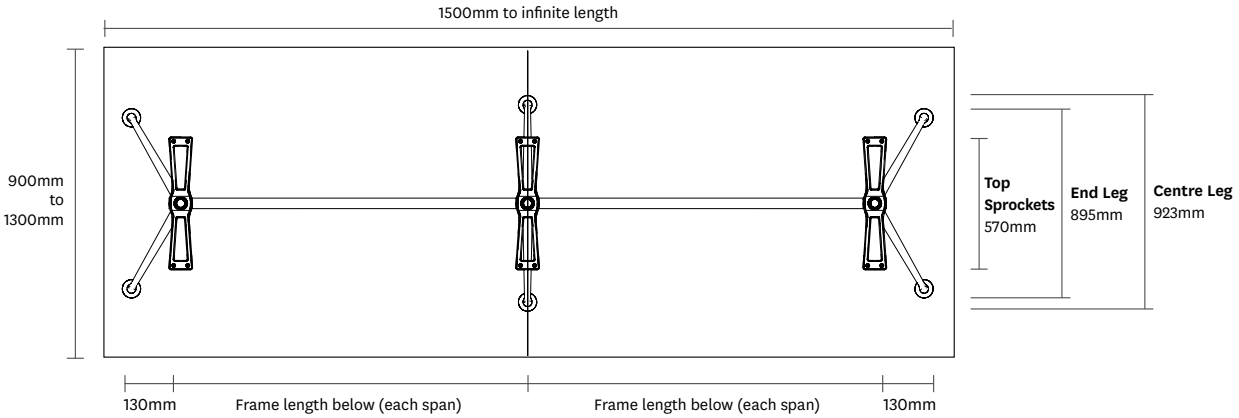

Frame length (each span)
ONE BEAM PER SPAN

AU-FWTOPRAIL1100 = 1150mm
AU-FWTOPRAIL1300 = 1350mm
AU-FWTOPRAIL1600 = 1650mm
AU-FWTOPRAIL2200 = 2250mm

Twin Post Legs with Collar

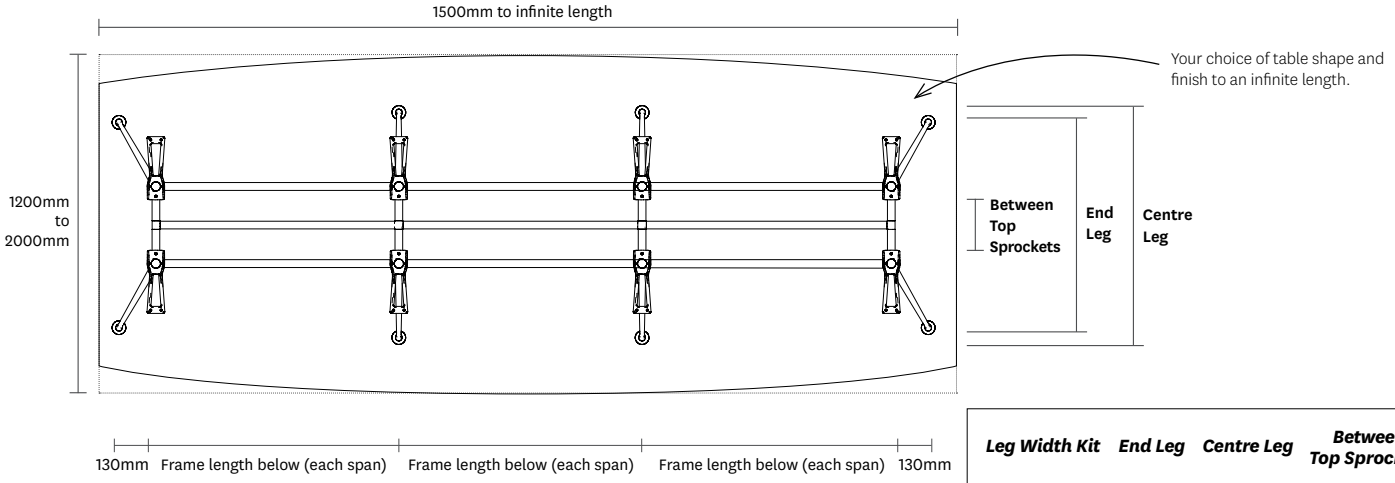

Leg Width Kit	*End Leg*	*Centre Leg*	*Between Top Sprockets*
AU-FW1200	1140mm	1260mm	180mm
AU-FW1400	1255mm	1375mm	295mm
AU-FW1600	1455mm	1575mm	495mm
AU-FW1800	1675mm	1775mm	695mm

Upper frame length (each span)
TWO BEAMS PER SPAN

AU-FWTOPRAIL1100 = 1150mm
AU-FWTOPRAIL1300 = 1350mm
AU-FWTOPRAIL1600 = 1650mm
AU-FWTOPRAIL2200 = 2250mm

Lower frame length (each span)
ONE BEAM PER SPAN

AU-FWBOTRAIL1100
AU-FWBOTRAIL1300
AU-FWBOTRAIL1600
AU-FWBOTRAIL2200

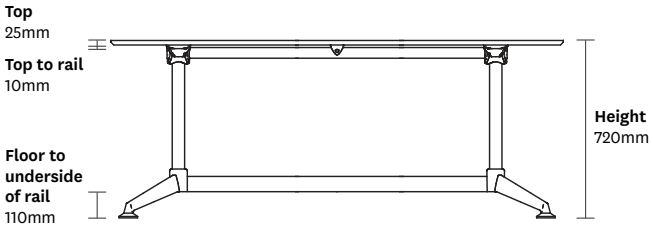

ABBOTTS

Tel: 03 9818 8866 Fax: 03 9818 8113
Email: sales@abbottsfurniture.com.au
www.abbottsfurniture.com.au